Technical Data Sheet
60cm Built-in Fan Forced Oven
604.8A41.404.001 IO64

INALTO

DIMENSIONS & TECHNICAL DRAWINGS

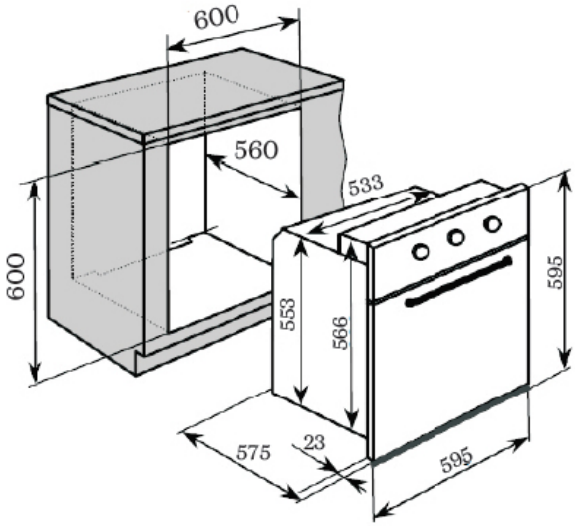

FEATURES

4 induction cooking zones
2 extendable zones
Touch control operation
German made EGO induction modules
Timer function for each zone
Frameless, beveled edge glass

Details & Ordering Information

BURNER OUTPUTS

2 x 1.85/2.10kW induction zones (extendable)
2 x 1.40kW induction zones

SAFETY

Induction technology (not radiant)
Child lock function

ACCESSORIES

Sealing strip (already attached to cooktop underside)

CLEANING

Durable European-made Schott Ceran glass
Single piece of glass

PRODUCT DIMENSIONS

Packaged (W D H mm): 642 x 570 x 120mm
Physical (W D H mm): 590 x 520 x 56mm
Weight: 14kg

REQUIREMENTS

Rated voltage: 220-240V, 50/60 Hz Current requirements: 40A
Hard-wired installation

WARRANTY

24 months