PELOY100

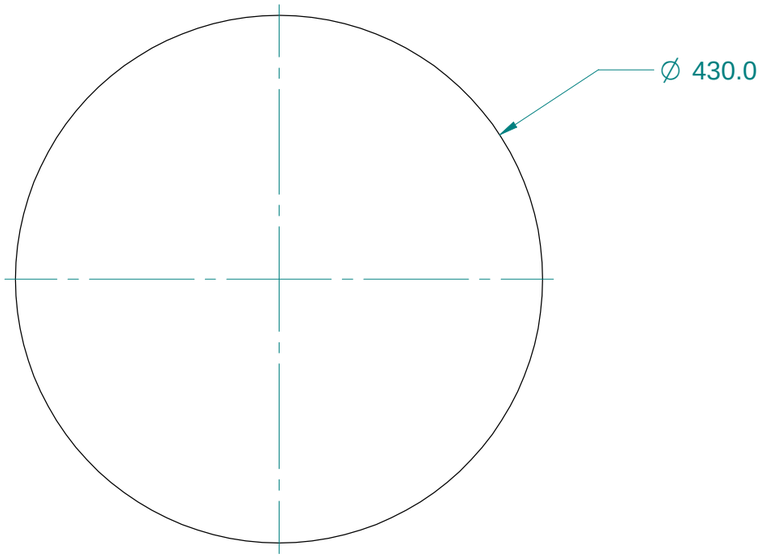

1:5

PEL50695

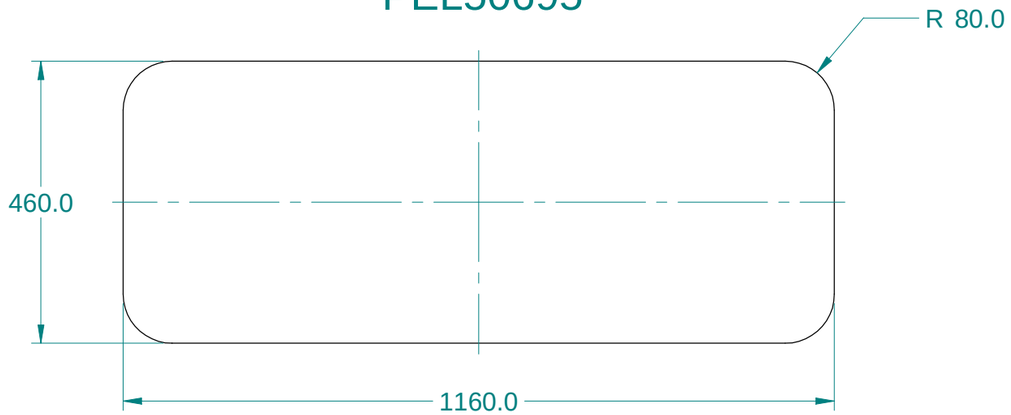

1:10

PEL50690

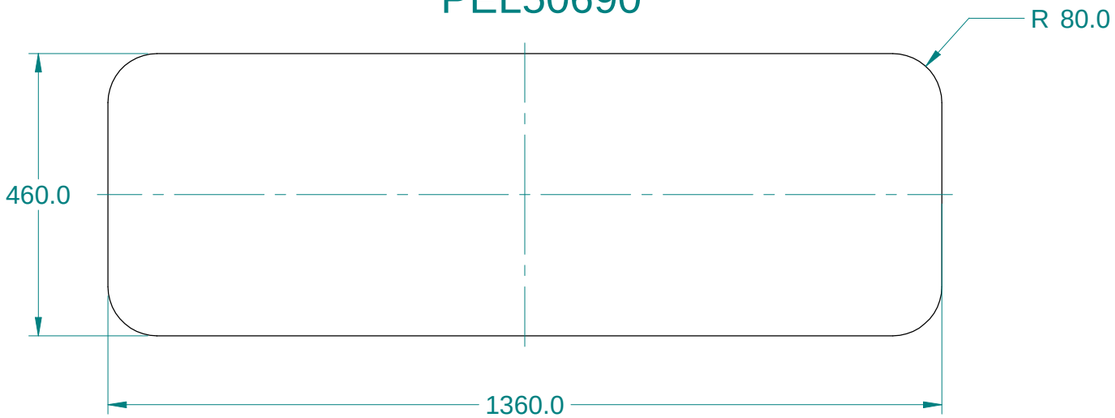

1:10

PEL50700

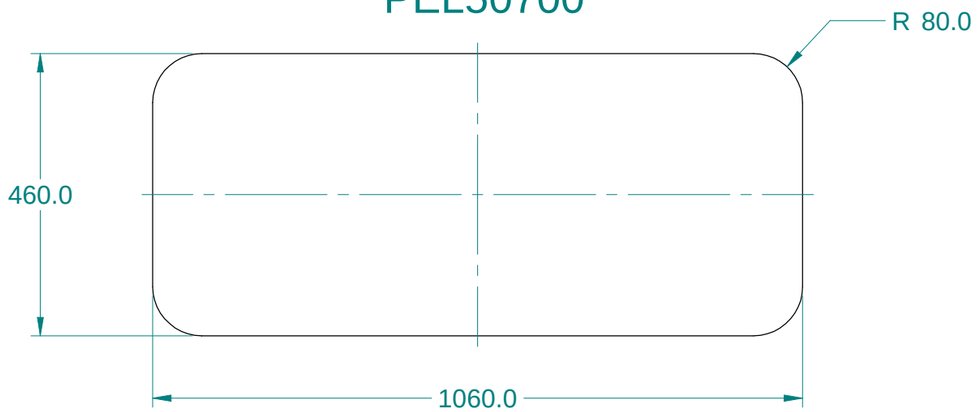

1:10

Notes:

1. Drawing developed from a 3D CAD model.
2. Consult model for dimension not shown.
3. Remove all burrs and sharp edges.

Rev:	Description:	Date:	By:	Tekform Titus	Title: PEL RANGE BENCH CUTTING PROFILES		Product:		Drawn By:	SGJ
									Drawn Date:	28 Sept 2016
					Tolerances: (Unless Stated)	Material:	Third Angle Projection	Size: A3	Checked By:	-
				www.titustekform.com.au	X. = ± 2.0	Size:	All Dimensions in mm [in]		Checked Date:	-
				info@titustekform.com.au	X.X = ± 1.0	Finish:	Mass:	Rev: 00	Drawing No:	0009
					X.XX = ± 0.5	Form:	Sheet: 1 of 2	Status Draft 00		
					Angles = ± 1.0°					

PEL50705

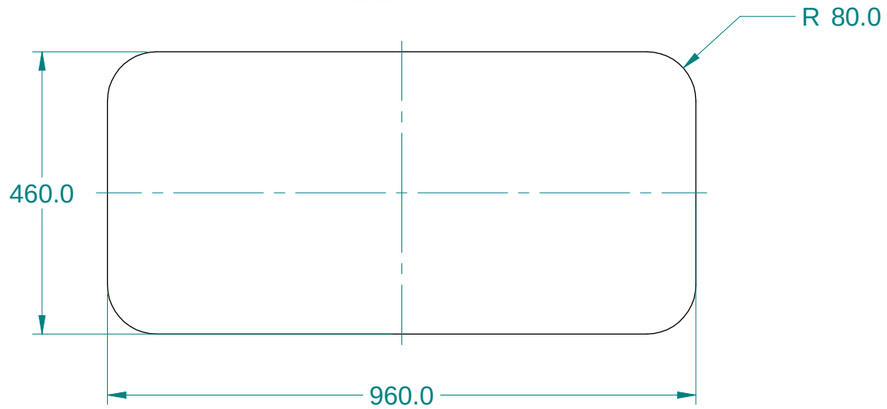

1:10

PEL50745

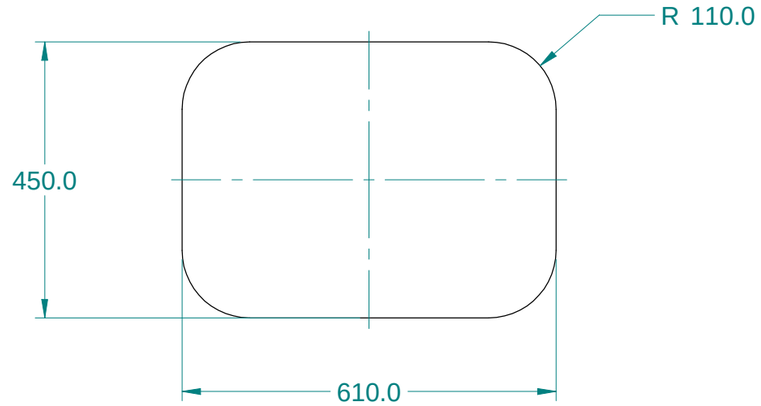

1:10

PEL50710

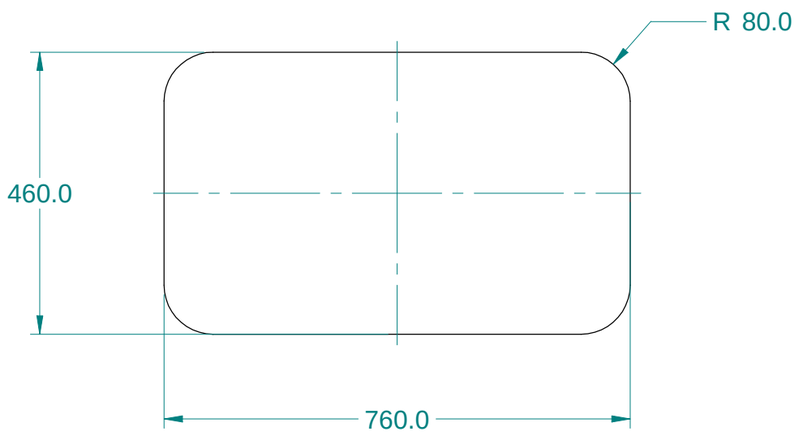

1:10

PEL50750

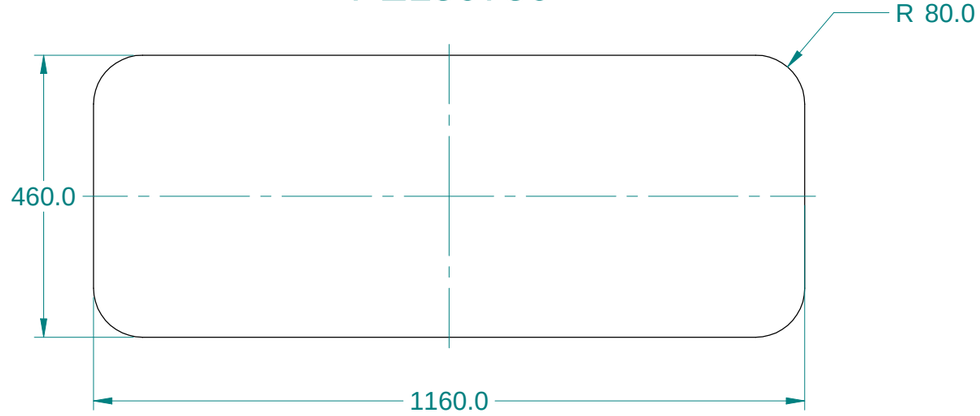

1:10

Notes:

1. Drawing developed from a 3D CAD model.
2. Consult model for dimension not shown.
3. Remove all burrs and sharp edges.

Rev:	Description:	Date:	By:	Tekform Titus+	Title: PEL RANGE BENCH CUTTING PROFILES		Product:		Drawn By:	SGJ
									Drawn Date:	28 Sept 2016
					Tolerances: (Unless Stated)	Material:	Third Angle Projection	Size: A3	Checked By:	-
				www.titustekform.com.au	X. = ± 2.0	Size:	All Dimensions in mm [in]		Checked Date:	-
				info@titustekform.com.au	X.X = ± 1.0	Finish:	Mass:	Rev: 00	Drawing No:	0009
					X.XX = ± 0.5	Form:	Sheet: 2 of 2	Status Draft 00		
					Angles = ± 1.0°					